Model: CKWS003 Wall Mount

Protection Level: IP65; NEMA4X
Lifespan: > 5 years.
Interface: USB
Supply Voltage: +5V DC +/-5%
Operating temperature: -10C to +60C
Storage temperature: -20C to +70C.
Panel dimensions: 440mm x 200mm
Dust proof, Water proof, Vandalism resistance
Mounting type: Back mount
No. of keys: 83 keys, high quality stainless steel
Track ball diameter: 38mm
Key switch Technology: Silicone switching element
Key switch lifetime: > 5 million of operations.
Actuation Force/travel: 1N/2.0mm
Mounting Rack: Aluminum alloy
Lettering: laser engraved legends for excellent durability
G.W.: 3.70kg.
All languages version and interface are available on request.

Application fields:

- Self service kiosk
- Industrial PC system
- Medical & Food industry
- Gaming machine & Vending Machine
- Navigation & aviation
- CNC machine and other factory equipment

Available from:

ESIS Industrial Electronics
www.esis.com.au
Ph 02 9481 7420
Fax 02 9481 7267
esis.enq@esis.com.au

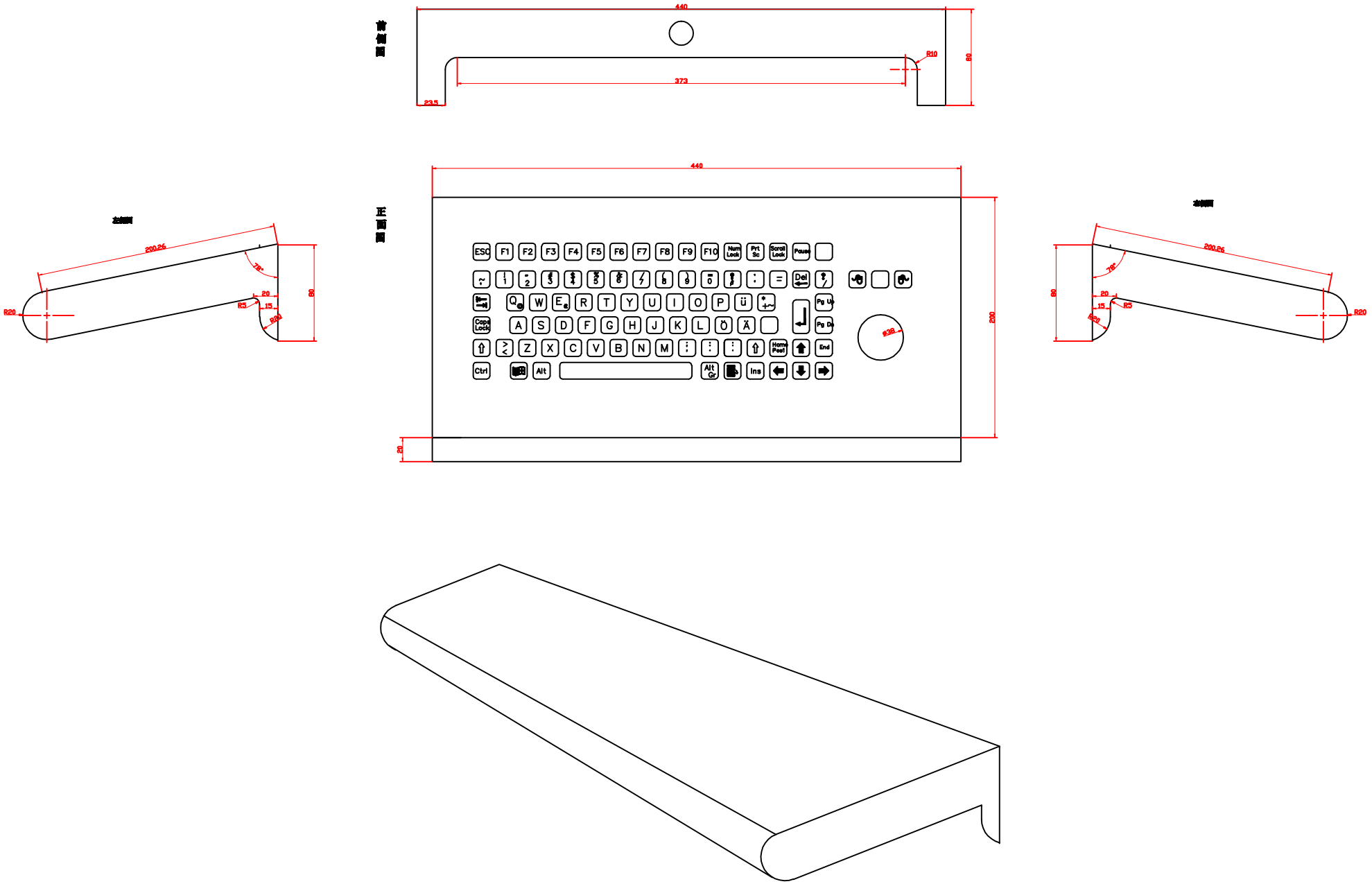

前側面
正面面
左側面
右側面
440
373
23.5
R10
80
200
200.26
78°
20
15
R5
R20
ø38